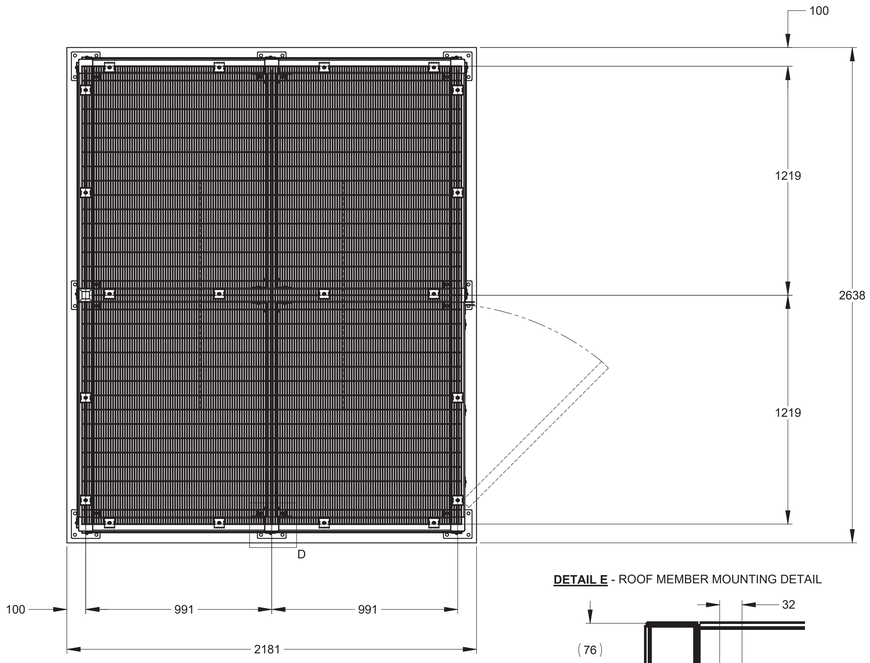

DETAIL D - POST / BASE PLATE DETAIL

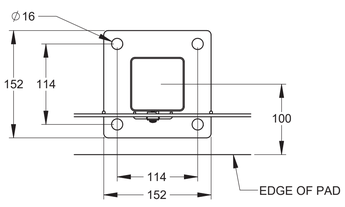

DETAIL E - ROOF MEMBER MOUNTING DETAIL

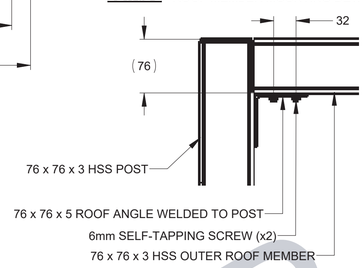

ROOF MEMBER DETAIL (RAMPART 358 REMOVED FOR CLARITY)

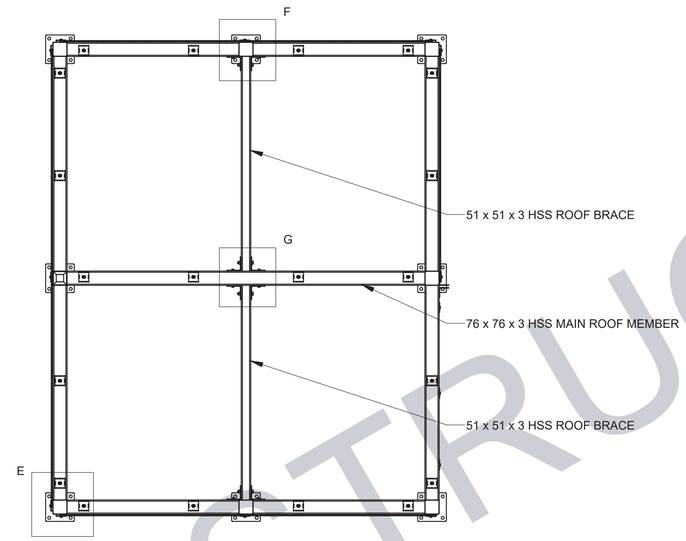

DETAIL F - OUTER ROOF BRACE MOUNTING DETAIL

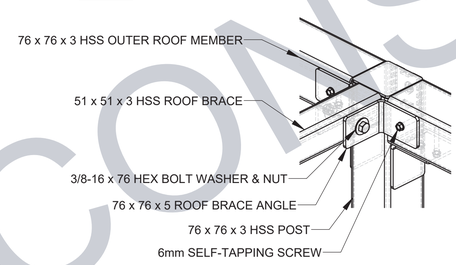

DETAIL G - CENTER ROOF BRACE MOUNTING DETAIL

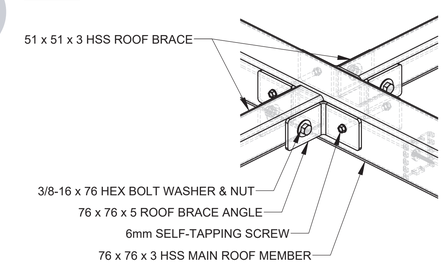

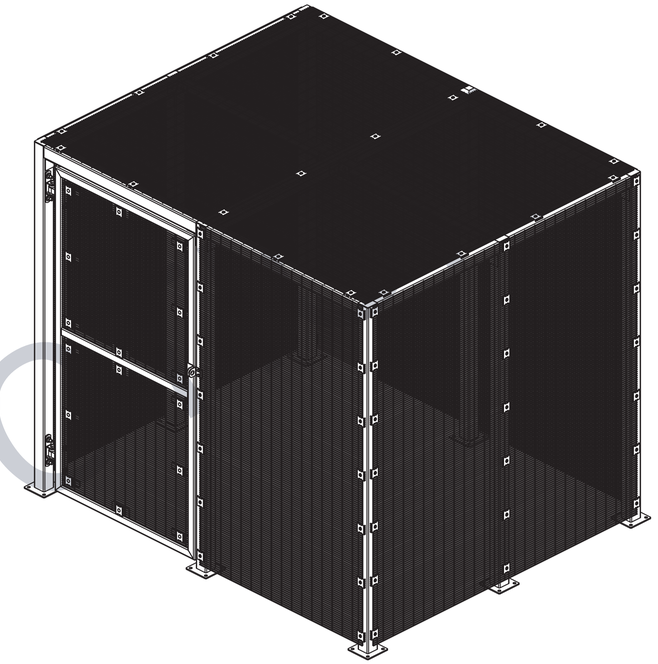

DETAIL C - GATE PADLOCK PLATE DETAIL

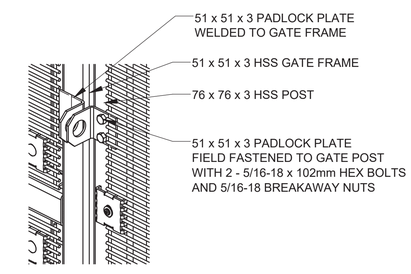

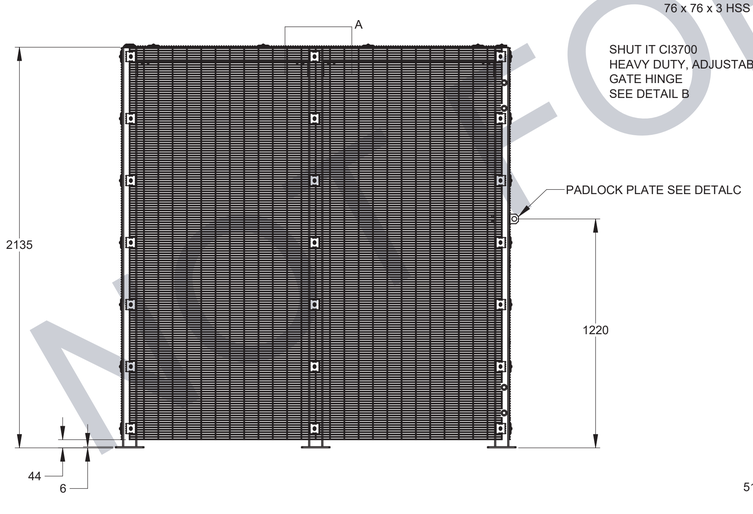

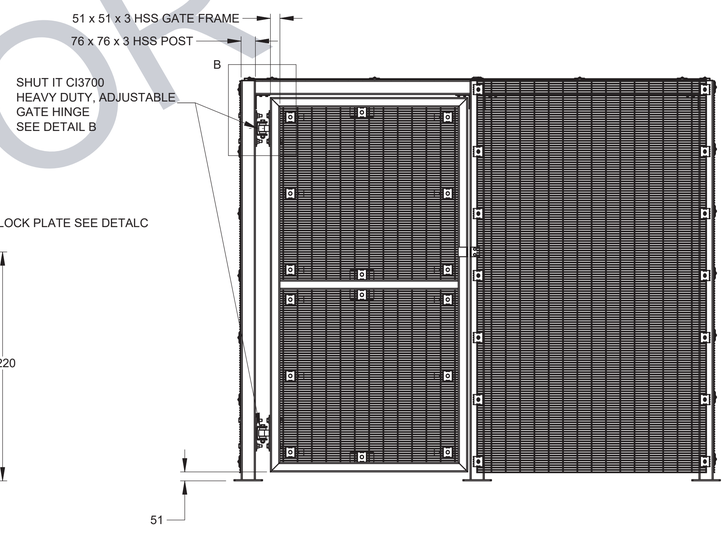

DETAIL A - RAMPRT 358 MOUNTING DETAIL

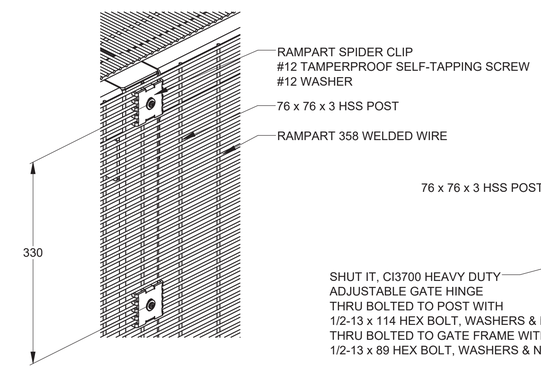

DETAIL B - GATE HINGE / RAMPART MOUNTING DETAIL

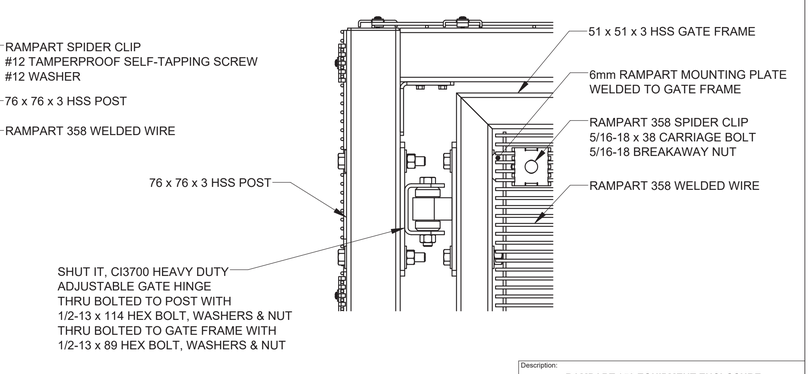

NOT FOR CONSTRUCTION

WALLACE PERIMETER SECURITY
115 Lowson Crescent
Winnipeg, Manitoba, Canada, R3P 1A6
Fax: 1-204-284-1868
Web: www.wallaceperimetersecurity.com

Description: **RAMPART 358 EQUIPMENT ENCLOSURE SINGLE SWING GATE** 2.4M x 1.9M x 2.1M			
Customer / Project:			
Finish: POWDER COAT, BLACK			Date: 6/29/2023
Drawing No. **BIKE ENCLOSURE 358**		Rev.	Sheet: 1 of 1